SPECIFICATIONS

(RoHS Compliant)

Model Number: CLE2T2
Part Number: 19020189A
SPEC NUMBER: 26013849A01 Feb 05, 2013

Mechanical Drawing:

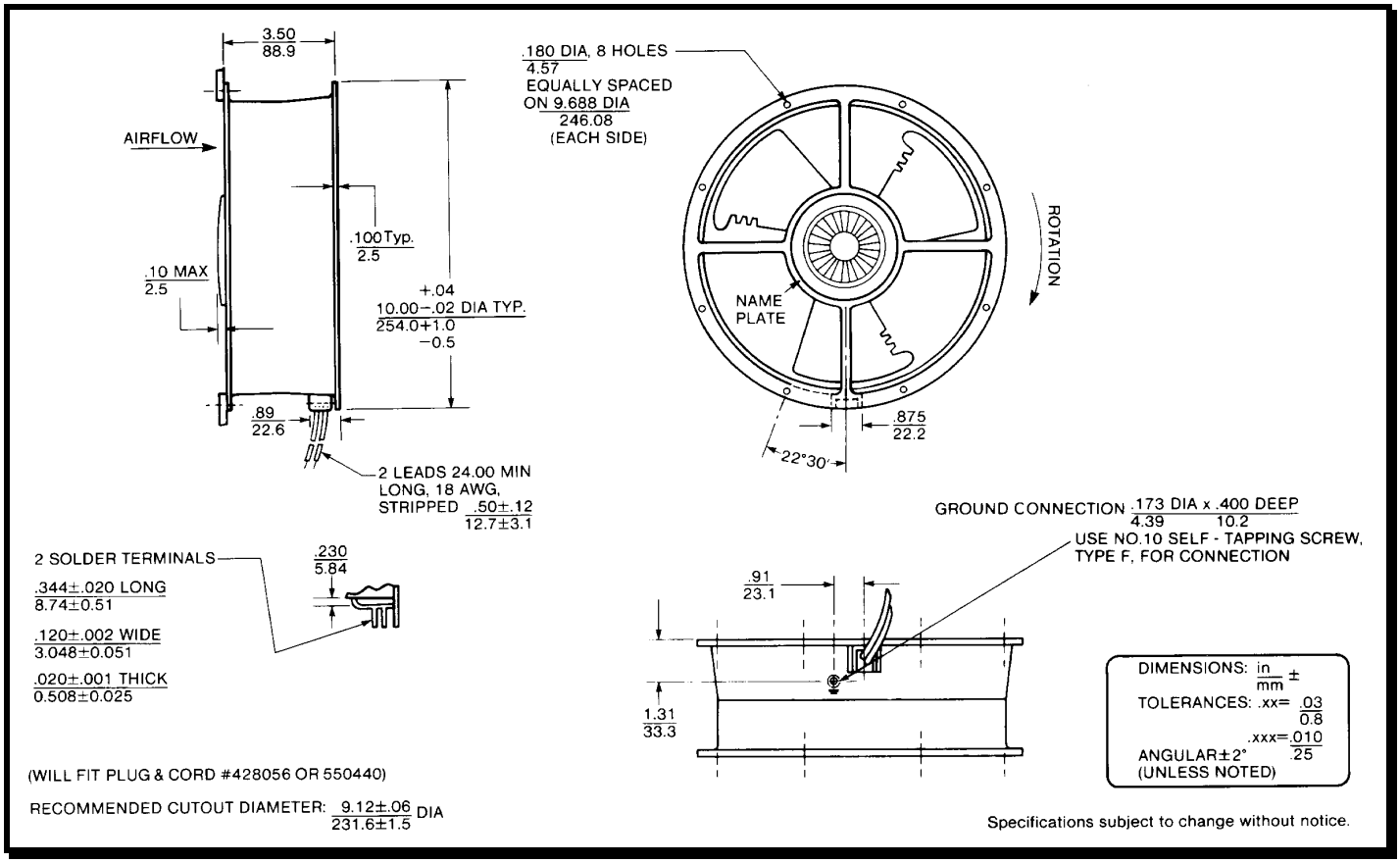

Motor:

Nominal Voltage	= 115 VAC
Frequency	= 50 / 60 Hz
Nominal Running Current	= 1.00 / 0.88 amps
Max. Locked Rotor Current	= 1.60 amps
Running Power	= 67 / 61 Watts
Average Speed	= 1400 / 1650 RPM
Bearings	= Ball
Air Flow	= 455 / 550 CFM
Acoustic:	= 45.4 / 49.2 dBA

Construction:
Venturi: Aluminum, Black
Propeller: Plastic, Black, UL 94V-0

Life Expectancy:
This fan is designed for continuous duty life of 54,000 hours at 40°C.

Additional Features:
Permanent Split Capacitor Motor
Automatic Reset Thermal Protector
Class A Insulation
Feathered Edge Propeller
Operating Temperature: -30°C to 60°C
Storage Temperature: -40°C to 85°C

Termination:
2 solder terminals

Agency Approvals:
UL, CE